reventon
INDUSTRIAL SOLUTIONS

Technical documentation

ELECTRIC HEATED AIR CURTAIN

MODELS:

REVENTON GROUP AERIS 90EN-3P
REVENTON GROUP AERIS 120EN-3P

ENG T ECHNICAL DATA

1. INTRODUCTION
   1.1 PRECAUTIONS
   1.2 TRANSPORT
   1.3 PACKAGE CONTENT
   1.4 USE
2.DEVICE CHARCTERISTICS
   2.1 DIMENSIONS
   2.2 TECHNICAL DATA
3. INSTALLATION
   3.1 GENERAL PRINCIPLES
   3.2 ASSEMBLY „STEP BY STEP”
4. INSTALLATION INSTRUCTIONS
   4.1 CONNECTION OF THE DEIVCE TO THE ELECTRICAL SYSTEM
5. PRECAUTIONS AND WARNINGS
6. CONTROLS
7.CONNECTION SCHEMES
8.TERMS OF WARRANTY

1. INTRODUCTION

Thank you for purchasing air curtain AERIS. We would like to congratulate on good choice. Please read and save these instructions.

1.1 PRECAUTIONS

The buyer and the user of the device should read carefully the following instructions and proceed to the content recommendations. Proceeding due to the following instruction guarantees the correct usage and safety. In case of any doubts please contact Reventon Group sp. z o. o. [Ltd.]. The supplier reserves the rights to make changes to the technical documentation without previous notice. Reventon Group sp. z o. o. [Ltd.] is not responsible for the damages which occur due to improper installation, not keeping the device in repair or using the device out of line. The installation should be carried out by the professional installers, who possess the qualifications to install these types of devices. The installers are responsible for making the installation as instructed in the technical data. Regulations and safety rules must be followed. During the installation, use, service and periodical inspections all regulations and safety rules must be followed. In case of unserviceable please plug out the device and contact with the authorized person or the supplier. All safety requirements must be taken into account during installation, use or inspection.

1.2 TRANSPORT

During the acceptance of goods it is needed to check the device in order to exclude any damages. During the transport it is needed to use the proper equipment, it is necessary to carry the device by two people. In case of any damages please fill in the damage report in presence of the supplier or the carrier.

1.3 PACKAGE CONTENT

- air curtain
- operation and maintenance manual and warranty card
- assembly panel
- door sensor

1.4 USE

Air curtains are widely installed at the entrances of supermarkets, theaters, meeting rooms, hotels, offices, storages etc. They can reduce penetration of insects, outside dust, unconditioned air into a conditioned space by forcing an air stream over the entire entrance. In winter they prevent uncontrolled heat loss and in summer they prevent heat from the room. However, air curtains should not be used in corrosive environments for aluminum, copper and steel as well as in highly dusty environments (above 0.3 g/m^3).The devices should also not be installed in rooms where they would be exposed to high humidity or direct contact with water.

2. DEVICE CHARCTERISTICS

2.1 DIMENSIONS

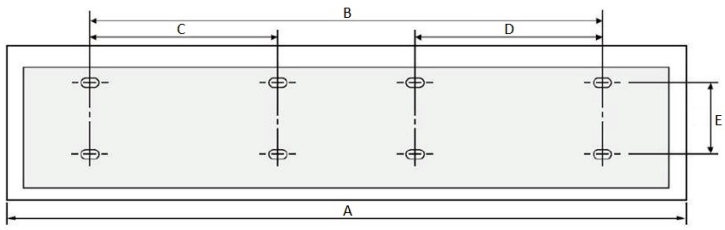

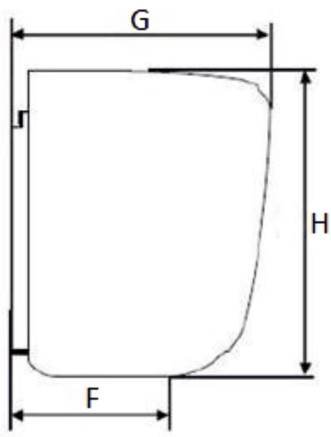

MODEL	A	B	C	D	E	F	G	H	N.W (KG)
REVENTON GROUP AERIS 90EN-3P	916	440	---	---	90	132	218	247	15,5
REVENTON GROUP AERIS 120EN-3P	1200		---	---					19,0

2.2.TECHNICAL DATA

TECHNICAL DATA Product code		AERIS 90EN-3P AC90EN3P	AERIS 120EN-3P AC120EN3P
Heater power [kW]		8	10
Rated heater current [A]		11.5	14.5
Maximum airflow [m³/h]	III BIEG	1600	2400
	II BIEG	1450	2150
	I BIEG	1300	1950
Maximum air speed [m/s]	III BIEG	11	11
	II BIEG	10	10
	I BIEG	9	9
Curtain's range [m]	II BIEG	3	3
Heater supply voltage [V] / Heater supply frequency [Hz]		400/50	400/50
Motor supply voltage [V] / Motor supply frequency [Hz]		230/50	230/50
Motor power [W]	III BIEG	260	380
	II BIEG	230	355
	I BIEG	200	330
Rated motor current [A]	III BIEG	1.13	1.65
	II BIEG	1.00	1.54
	I BIEG	0.87	1.43
Class of isolation /Protection degree IP [-]		E / IP 20	E / IP 20
Net weight [kg]		15.5	19.0
Noise [dB]	III BIEG	61	62
	II BIEG	60	61
	I BIEG	59	60

WIRE SIZE FOR WIRING

Power supply	3-PHASE (400 V~,MAIN WIRE CONDUCTOR L1, L2, L3, N)							
Power of heater [kW]	3	4	5	6	8	10	12	14
Minimum wire size of main wire conductor [mm^2]	1.5		2.0		4.0		6.0	
Minimum wire size of ground wire conductor [m^2]	1.0		1.5		2.5		4.0	

WARNING: Forbid to overload operation for a long time!

3. INSTALLATION

3.1. GENERAL PRINCIPLES

The following figures show the recommended distances between the air curtain and the building partition:

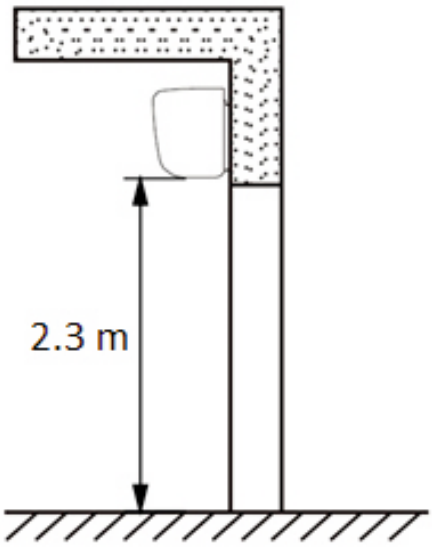

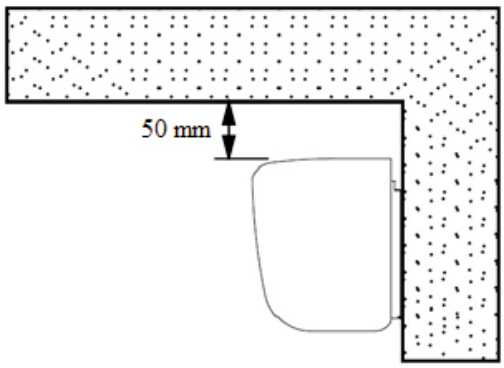

The width of the curtain should be greater or equal to the width of the door frame. When the entrance is wider than the unit, it is recommended to install two or more units in parallel. In this case, provide 10-40 mm gaps between the units.

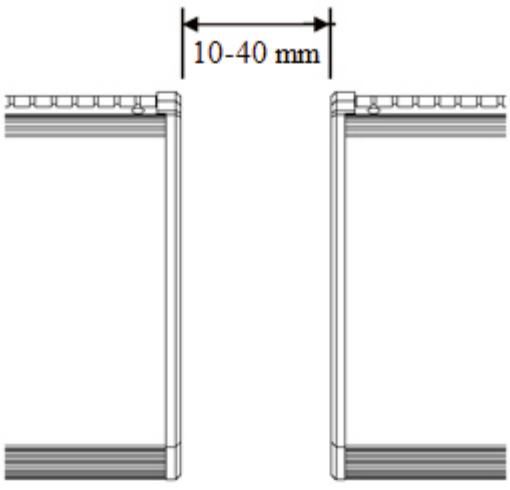

3.2. ASSEBLY "STEP BY STEP"

The curtain can be assembled on wall or ceiling. If any components are not included in the kit, you should buy them yourself and make sure they are suitable for this type of installation.

a) wall mounting

- unscrew the fixing screws to remove the mounting plate from the back of the main body

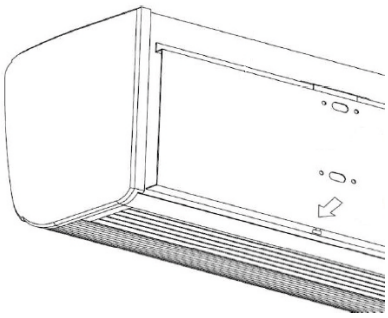

- install mounting plate on the wall

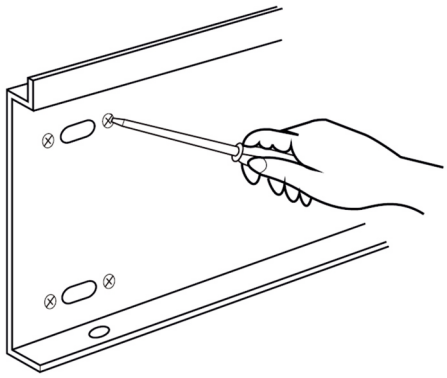

-install the main body. Set the main body onto the upper end of the mounting plate and clamp it as shown

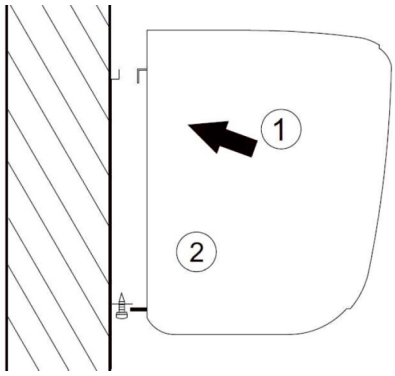

4. INSTALLATION INSTRUCTIONS

4.1. CONNECTION OF THE DEIVCE TO THE ELECTRICAL SYSTEM

- all works concerning electrical installation should be made by the qualified personnel (who possess required authorizations to install electrical equipment), based on wiring schematic diagrams (see 7)

- the electrical installation of the building shall have a residual current device

- check the electrical installation and automation before the first start

5. PRECAUTIONS AND WARNINGS

During operation of the device, the following must be respected:

- all works concerning electrical installation (disassembly, repair etc.) should be made by the qualified personnel, who possess the qualifications due to the domestic and local norms, regarding electrical installations

- do not limit or cover the inlet and outlet of the device

- do not install, service the device with wet hands or barefoot

- the device should be kept out of reach of children and animals

- when no need heating, turn off the heat source to use it as an unheated air curtain
- after the turn off, the elements of device may be warm

- after operating time of the device, please utilize it concerning the local norms and regulations

- don't allow water or any liquid to enter the motor

- maintenance and repair work must be carried out by a qualified personnel familiar with local regulations and standards

- always unplug or disconnect the appliance from the power supply before installation, servicing or cleaning the unit

- never use petrol, benzene, thinners or any other chemicals for cleaning the unit

- periodic maintenance work should be carried out at least once a year by:
ź cleaning the heater and other elements from dust
ź cleaning of plastic parts with water with the addition of soap
ź cleaning the casing with a soft cloth

- failure to comply with cleaning obligations may have a negative effect on technical parameters of the device and lead to loss of warranty

- if the device is not used for a longer time disconnect the voltage supply

-if any abnormality happens, turn off the product immediately and check the problem

6. CONTROLS

Usage of automatic control dedicated to the electric air heaters of Reventon Group gives great possibilities of adjusting the efficiency of the curtain in different, depending on needs, degree of automation of its operation. We also offer additional controls:

3-stage speed regulator with thermostat HC-3S
is used to regulate devices equipped with 3-stage fans. It has a 3-stage speed control and built-in thermostat switches the device of automatically when the preset temperature is reached.



Voltage/ Frequency: 230 V AC / 50 – 60 Hz
Maximum current output: 3 A
Temperature range: 10°C - 30°C
Operating mode: continious or thermostatic
Control accuracy: <1°C
Dimensions: 130 x 85 x 40 mm
Weight: 210 g
Degree of casing's protection: IP 30

7. CONNECTION SCHEMES

LEGEND:

1. Power
2. Main switch, overcurrent circuit breaker *
3. Electric heated air curtain AERIS EN-3P
4. 3-stage speed controllers with thermostat HC3S
   A-work in continuous mode
   B-operation in thermostatic mode
5. Door switch

* main switch and overcurrent circuit breaker are not included in the unit

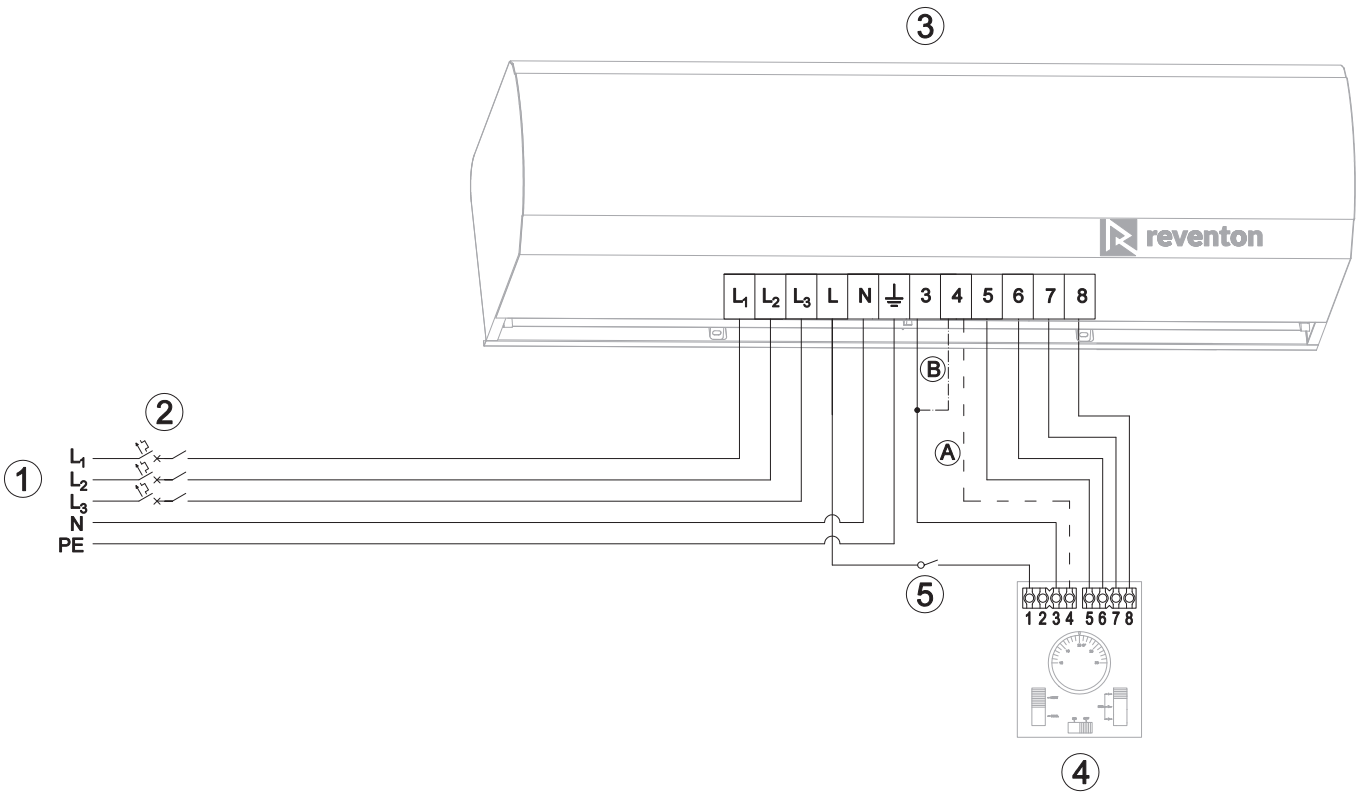

8. WARRANTY TERMS

I. The company Reventon Group Sp. z o. o. [Ltd.], hereinafter referred to as the guarantor, provides to the owner 24-month warranty protection period for the following devices:

- electric heated air curtain AERIS 90EN-3P
- electric heated air curtain AERIS 120EN-3P

II. The warranty protection is valid from the purchasing date by end user (i.e. the issue date of invoice) but not longer than 30 months from leaving the warehouse of Reventon Group Sp. z o. o. [Ltd.].

III. The warranty claim should be reported via the complaint form on the website (https://reventongroup.eu/en/complaints). The scan or the photo of the fulfilled Warranty Card and the purchase invoice must be attached to the form. The Warranty Card is not required in case of accessories.

IV. The guarantor is committed to consider the claim within 14 working days since the date of reporting (i. e. the day of receipt of the correctly fulfilled warranty form).

V. In exceptional cases, the guarantor reserves the right to extend the time for consideration of the request, especially if the defect is not permanent one and its determination requires a deeper analysis. The extension must be notified by the guarantor before the end of the 14th working day.

VI. Under the warranty, the guarantor provides a repairment, replacement (the device or its component) or refund for the defective item within a specified time.

VII. In the case of replacement of a device component, the warranty protection of the whole unit is not prolonged.

VIII. The guarantor does not cover the costs of disassembly and eventual reassembly of the complaint device.

IX. The guarantor may decide to bring the defective device or its component to the service of Reventon Group Sp. z o. o. [Ltd.]. In such case the transport of the item is organised and paid by the guarantor. The responsibility of the device's owner is to prepare the item for the shipment - the device must be packed in a way which protects it against transport damages and the dimensions and weight of the package must not exceed 660 x 650 x 400 mm and 30 kg respectively. In the case of elements which cannot be packed in this way, the method of shipment must be agreed and approved by Reventon Group Sp. z o. o. [Ltd.]. In the case of sending a non-standard package without agreement of the service of Reventon Group Sp. z o. o. [Ltd.], the guarantor reserves the right to charge the owner of device with all additional transport costs.

X. In the case of arrival of the authorized service of the guarantor or an installer to fix the complaint item, the customer must ensure them seamless access to the device and all required media like electricity, water, lighting etc. free of charge.

XI. The warranty protection does not cover the parts of the device subject to the normal usage and the following cases:

a) mechanical damage of the product

b) defects and damages through:

- improper storage or transport
- improper or non-compliant use and maintenance (i. e. inconsistent with the manual)
- using the device in the improper conditions (too high humidity, too high or too low temperature, impact of the surrounding, sun etc.)
- unauthorized (i. e. by the user or other unauthorized persons) repairs, modifications or construction changes
- connecting equipment inconsistent with the technical documentation
- connecting additional equipment, which is not recommended by the guarantor
- improper power supply
- random events (like fire, flood, storm etc.)

c) elements which wear and tear such as discolour of the housing

If there is any of the above, the claimant will be charged for transport and / or repairs.

XII. During collection of the device, the item must be checked exactly by the receiver to exclude transport damages. If any of them is observed, the damage report in presence of the product deliverer have to be filled - such report is the basement for the warranty claim. The damage report must be provided by the product deliverer.

XIII. The guarantor does not take the responsibility for potential losses and damages related to the downtime of the device during its failure and the complaint considering time.

XIV. Any changes in the Warranty Terms, improper use of the product as well as traces of self repairing (beyond the guarantor service) or alterations cause, the warranty become invalid.

XV. These Warranty Terms do not exclude or limit any rights arising from the pledge.

XVI. Not following to any of the warranty regulations makes the protection invalid.

XVII. All correspondence should be sent to the following address: Reventon Group Sp. z o.o. [Ltd.], 556 Wyzwolenia Street, 43 340 Kozy, Poland or email address: serwis@reventongroup.eu.

Warranty Card

1 - Model and serial number* or product code	2 – Address and place of assembly
3 – Date of connection to:	**4 – Stamp and signature of installer:**
Heating/cooling installation (if applicable)	
Ventilation installation (if applicable)	
Electrical installation (if applicable)	

*** serial numer is required only for water heaters HC-3S, HC-EC and FARMER HCF series and recovery units INSPIRO, INSPIRO BASIC and VERTIC series**



reventon

INDUSTRIAL SOLUTIONS

Reventon Group Sp. z o.o. [Ltd.], 556 Wyzwolenia Street, 43-340 Kozy, Poland, www.reventongroup.eu