reventon
INDUSTRIAL SOLUTIONS

Technical documentation

ELECTRIC HEATED AIR CURTAIN

MODELS:

AERIS 100E-1P
AERIS 150E-1P
AERIS 200E-1P

ENG TECHNICAL DATA

1. INTRODUCTION
   1.1 PRECAUTIONS
   1.2 TRANSPORT
   1.3 PACKAGE CONTENT
   1.4 USE
2. DEVICE CHARCTERISTICS
   2.1 DIMENSIONS
   2.2 TECHNICAL DATA
3. INSTALLATION
   3.1 GENERAL PRINCIPLES
   3.2 ASSEMBLY „STEP BY STEP"
4. INSTALLATION INSTRUCTIONS
   4.1 CONNECTION OF THE DEIVCE TO THE ELECTRICAL SYSTEM
5. PRECAUTIONS AND WARNINGS
6. INSTRUCTION OF USE
   6.1 CONTROL
   6.2 OVERHEATING PROTECTION
7. CONNECTION SCHEMES
8. TERMS OF WARRANTY

1. INTRODUCTION

Thank you for purchasing air curtain AERIS. We would like to congratulate on good choice. Please read and save these instructions.

1.1 PRECAUTIONS

The buyer and the user of the device should read carefully the following instructions and proceed to the content recommendations. Proceeding due to the following instruction guarantees the correct usage and safety. In case of any doubts please contact Reventon Group sp. z o. o. [Ltd.]. The supplier reserves the rights to make changes to the technical documentation without previous notice. Reventon Group sp. z o. o. [Ltd.] is not responsible for the damages which occur due to improper installation, not keeping the device in repair or using the device out of line. The installation should be carried out by the professional installers, who possess the qualifications to install these types of devices. The installers are responsible for making the installation as instructed in the technical data. Regulations and safety rules must be followed. During the installation, use, service and periodical inspections all regulations and safety rules must be followed. In case of unserviceable please plug out the device and contact with the authorized person or the supplier. All safety requirements must be taken into account during installation, use or inspection.

1.2 TRANSPORT

During the acceptance of goods it is needed to check the device in order to exclude any damages. During the transport it is needed to use the proper equipment, it is necessary to carry the device by two people. In case of any damages please fill in the damage report in presence of the supplier or the carrier.

1.3 PACKAGE CONTEN

- air curtain
- operation and maintenance manual and warranty card
- assembly panel
- door sensor
- remote controller

1.4 USE

Air curtains are widely installed at the entrances of supermarkets, theaters, meeting rooms, hotels, offices, storages etc. They can reduce penetration of insects, outside dust, unconditioned air into a conditioned space by forcing an air stream over the entire entrance. In winter they prevent uncontrolled heat loss and in summer they prevent heat from the room. However, air curtains should not be used in corrosive environments for aluminum, copper and steel as well as in highly dusty environments (above 0.3 g/m^3).The devices should also not be installed in rooms where they would be exposed to high humidity or direct contact with water.

2. DEVICE CHARCTERISTICS

2.1 DIMENSIONS

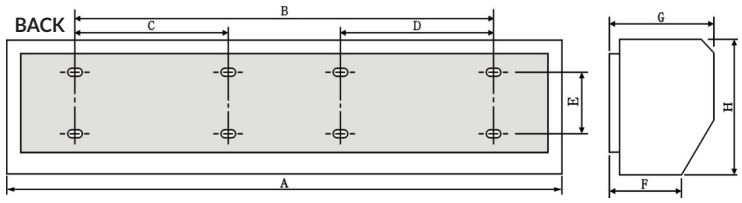

MODEL	A	B	E	F	G	H	N. W. (kg)
REVENTON GROUP AERIS 100E-1P	1015	440	90	105	195	265	15.5
REVENTON GROUP AERIS 150E-1P	1500	840					20.5
REVENTON GROUP AERIS 200E-1P	2025						26

2.2. TECHNICAL DATA

TECHNICAL DATA Product code		AERIS 100E-1P AC100E1P	AERIS 150E-1P AC150E1P	AERIS 200E-1P AC200E1P
Heater power [kW]	III HEATING LEVEL	6.0	10	14
	II HEATING LEVEL	4.0	6.7	9.4
	I HEATING LEVEL	2.0	3.3	4.6
Rated heater current [A]	III HEATING LEVEL	26.1	43.5	60.9
	II HEATING LEVEL	17.4	29.1	40.9
	I HEATING LEVEL	8.7	14.3	20
Maximum airflow [m^3/h]	II STAGE	1200	1900	2800
	I STAGE	1100	1700	2500
Maximum air speed [m/s]	II STAGE	8.5	8.5	8.5
	I STAGE	7.5	7.5	7.5
Curtain's range [m]	II STAGE	3	3	3
Heater supply voltage [V] / Heater supply frequency [Hz]		230/50	230/50	230/50
Motor supply voltage [V] / Motor supply frequency [Hz]		230/50	230/50	230/50
Motor power [W]	II STAGE	180	230	350
	I STAGE	130	180	300
Rated motor current [A]	II STAGE	0.78	1.00	1.52
	I STAGE	0.57	0.78	1.3
Class of isolation /Protection degree IP [-]		E / IP 20	E / IP 20	E / IP 20
Net weight [kg]		15.5	20.5	26
Noise [dB]	II STAGE	57	59	61
	I STAGE	55	57	59

WIRE SIZE FOR WIRING

Power	SINGLE PHASE (230V~, MAIN LINE : L, N)						
Heater power [kW]	3	4	5	6	8	10	14
Main line [mm^2]	1.5	2.5	2.5	4.0	6.0	10	10
Earth line [m^2]	0.75	1.0	1.0	1.5	2.5	2.5	4.0

WARNING: forbid to overload operation for a long time!

3. INSTALLATION

3.1. GENERAL PRINCIPLES

The following figures show minimum distances between the air curtain and the building partition:

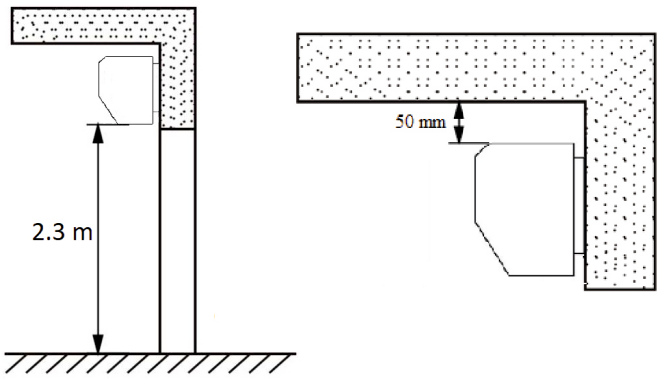

The width of the curtain should be greater or equal to the width of the door frame. When the entrance is wider than the unit, it is recommended to install two or more units in parallel. In this case, provide 10-40 mm gaps between the units.

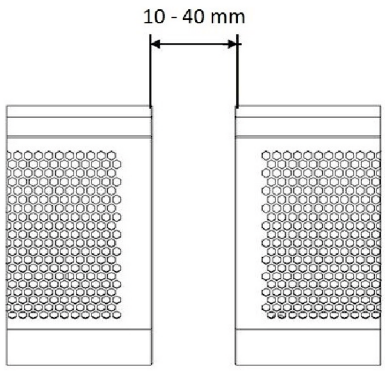

3.2. ASSEBLY "STEP BY STEP"

The curtain can be assembled on wall or ceiling. If any components are not included in the kit, you should buy them yourself and make sure they are suitable for this type of installation.

a) wall mounting

- unscrew the fixing screws to remove the mounting plate from the back of the main body

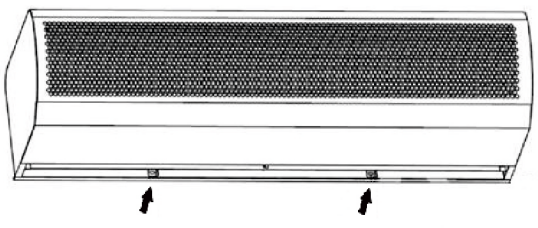

- install mounting plate on the wall

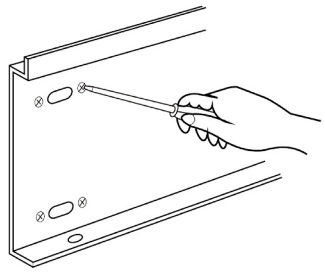

- install the main body. Set the main body onto the upper end of the mounting plate and clamp it as shown

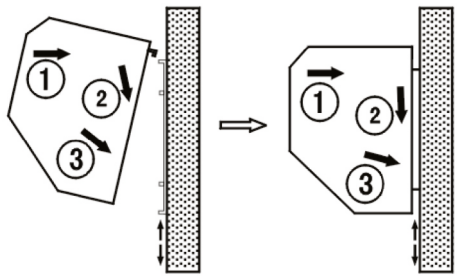

4. INSTALLATION INSTRUCTIONS

4.1. CONNECTION OF THE DEIVCE TO THE ELECTRICAL SYSTEM

- all works concerning electrical installation should be made by the qualified personnel (who possess required authorizations to install electrical equipment), based on wiring schematic diagrams. (see 7)

- the electrical installation of the building shall have a residual current device

- check the electrical installation and automation before the first start

5. PRECAUTIONS AND WARNINGS

During operation of the device, the following must be respected:

- all works concerning electrical installation (disassembly, repair etc.) should be made by the qualified personnel, who possess the qualifications due to the domestic and local norms, regarding electrical installations

- do not limit or cover the inlet and outlet of the device

- do not install, service the device with wet hands or barefoot

- the device should be kept out of reach of children and animals

-when no need heating, turn off the heat source to use it as an unheated air curtain

- after the turn off, the elements of device may be warm

- after operating time of the device, please utilize it concerning the local norms and regulations

- don't allow water or any liquid to enter the motor

- maintenance and repair work must be carried out by a qualified personnel familiar with local regulations and standards

- always unplug or disconnect the appliance from the power supply before installation, servicing or cleaning the unit

- never use petrol, benzene, thinners or any other chemicals for cleaning the unit

- periodic maintenance work should be carried out at least once a year by:
ź cleaning the heater and other elements from dust
ź cleaning of plastic parts with water with the addition of soap
ź cleaning the casing with a soft cloth

- failure to comply with cleaning obligations may have a negative effect on technical parameters of the device and lead to loss of warranty

- if the device is not used for a longer time disconnect the voltage suppl

- if any abnormality happens, turn off the product immediately and check the problem

6. INSTRUCTION OF USE

6.1 CONTROL

The device can operate in cooling mode (heaters are turned off, the mode is signilised by green diode) or in one of three heating modes - the low one (I heating level, it is signilised by one red diode), the middle one (II heating level, it is signilised by two red diodes) and the high heating mode (III heating level, it is signilised by three red diodes).
The curtain can be controlled by the remote controller or control panel located on the housing with three buttons ON/OFF, COOL and HEAT:
- ON/OFF button allows to turn on / off the device
- COOL button enables to switch between I and II motor stage
-HEAT button is used to change the operation mode (cool mode and three heating levels)



NOTES
- the curtain make a sound 'beep' everytime when you press any buttom (signaling the command acceptance)
- if the unit has run at heating mode, the fan will keep running for 30 seconds to cool down the heater and the green light will blink when turning off the unit

6.2 OVERHEATING PROTECTION

The air curtain has overheating protection. If the temperature of the heater exceeds the limit value, the device will switch to cooling mode and it will indicate with the green light.

7. CONNECTION SCHEMES

LEGENDA:
1. Power
2. Main switch, overcurrent circuit breaker *
3. Electric heated air curtain AERIS E-1P
4. Door switch

* main switch and overcurrent circuit breaker are not included in the unit

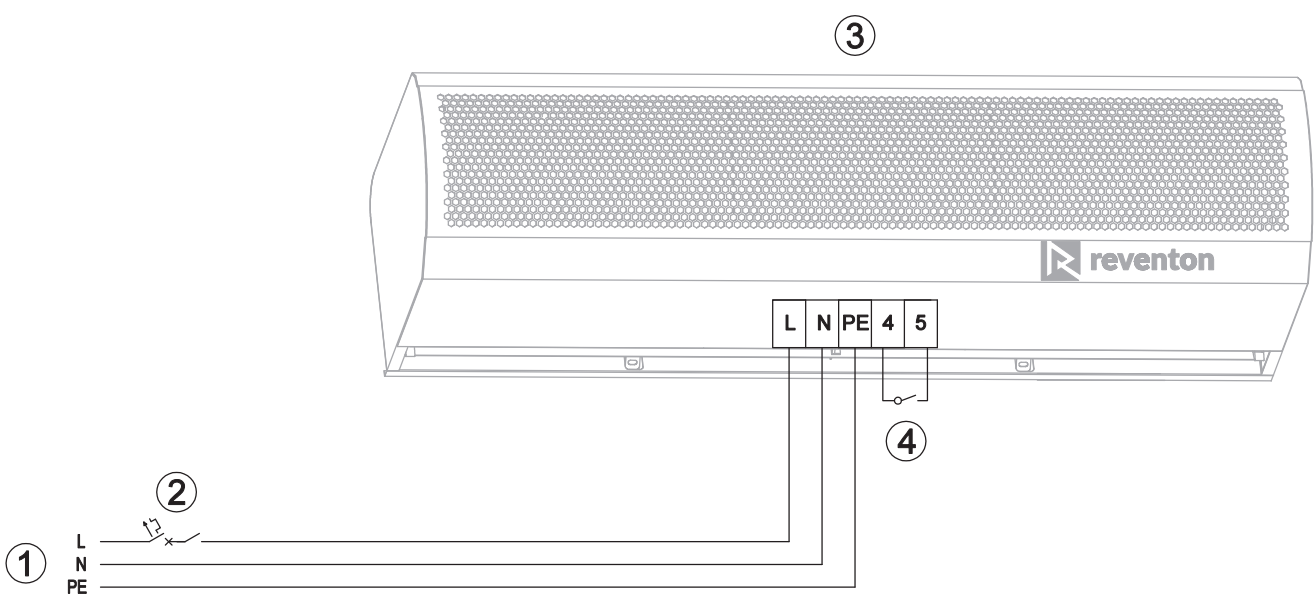

8. TERMS OF WARRANTY

I. Supplier Reventon Group Sp. z o.o. [Ltd.] grants the buyer a 24-month warranty period for the following devices:

- electric heated air curtain AERIS 100E-1P
- electric heated air curtain AERIS 150E-1P
- electric heated air curtain AERIS 200E-1P

II. The terms of warranty are valid from purchasing the device (i.e. invoice / another confirming document issue date) but not longer than 30 months from leaving the supplier's warehouse.

III. To obtain the service it is needed to provide or send to the supplier scans of the warranty card with stamp of installation company, document confirming the purchase (eg. like copy of the invoice) and correctly filled the warranty form.

IV. The supplier is committed to consider the claim within 14 working days since the date of reporting (i. e. day when documents given in point III are provided).

V. In the exceptional cases, the supplier reserves the right to extend the time limit for examination of warranty, especially if the defect is not permanent and its determination requires a longer period of time. The extension must be notified by the supplier before the end of the 14th working day.

VI. Under the guarantee the supplier provides a repairment, replacement or refund for the defective device within a specified time limit.

VII. Warranty does not cover the parts of the device subject to normal maintenance and the following cases:

a) mechanical damage of the product

b) defects and damages through:
- improper storage or transport
- improper or non-compliant use and maintenance (i. e. inconsistent with the manual)
- using the device in the improper conditions (too high humidity, too high or too low temperature, impact of the surrounding, sun etc.)
- unauthorized (by the user or other unauthorized persons) repairs, modifications or construction changes
- connecting equipment inconsistent with the technical documentation
- connecting additional equipment, which is not recommended by the supplier
- improper power supply

c) elements which wear and tear such as discolor of the housing

If there is any of the above, claimant will be charged for transport and / or repairs.

VIII. Any changes in the Warranty Terms, improper use of the product (careless handling, exposure to liquids, moisture, corrosion), as well as traces of selfrepairing (non by the Reventon Group) or alterations cause, the warranty is not valid.

IX. Not following to any of warranty regulations makes the warranty not valid.

X. All correspondence, returns, complains should be send to the following address: Reventon Group Sp. z o.o. [Ltd.], 556 Wyzwolenia Street, 43-340 Kozy, Poland or email address: serwis@reventongroup.eu.

The supplier reserves the rights to make changes to the technical documentation without previous notice.

Warranty card

Factory number of the device:	Address and place of assembly :
Stamp and signature of the installation company:	

Warranty form

The company reporting the complaint:	Date of assembly:	Address and place of assembly the device:
	Date and circumstances of noticing the defect:	
The company installing the device:		
Factory number of the device:	Date of declaration the complaint:	
Description of the defect:		
Contact Name and Surname, telephone number/ e-mail address:		

Service card

Date of declaration the complaint :	Description of the repair :	Service stamp :
Date of repair :		



reventon

INDUSTRIAL SOLUTIONS

Reventon Group Sp. z o.o. [Ltd.], 556 Wyzwolenia Street, 43-340 Kozy, Poland, www.reventongroup.eu